KESQ2145NASR - Range UV-A : 315-400nm / Range UV-B : 280-315nm

Product images are for illustrative purposes only

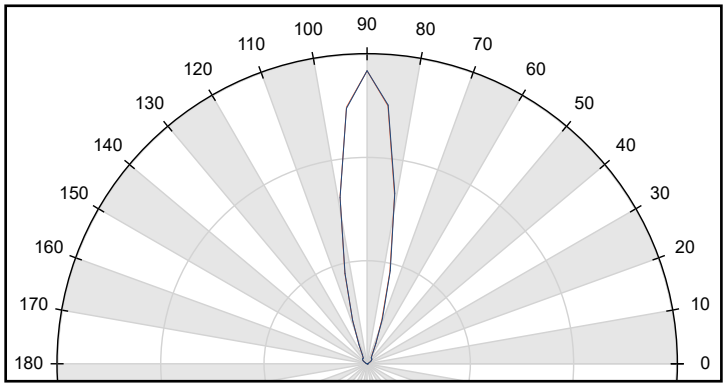

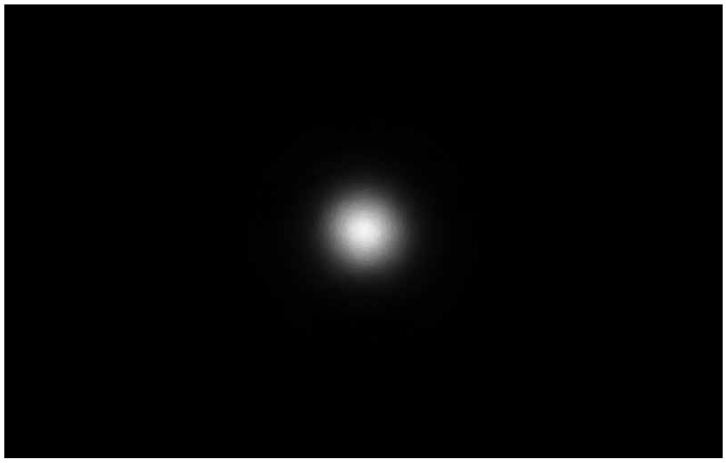

- Material = SILICONE for Lens / PC Black for Holder
- Full angle C0-C180 at 50% from maximum: ~ 7.4°
- Full angle C0-C180 at 10% from maximum: ~ 15.2°
- The light spots here represented refer to tests carried out with **1.7x1.5mm LEDs**, and ~325mW@LED

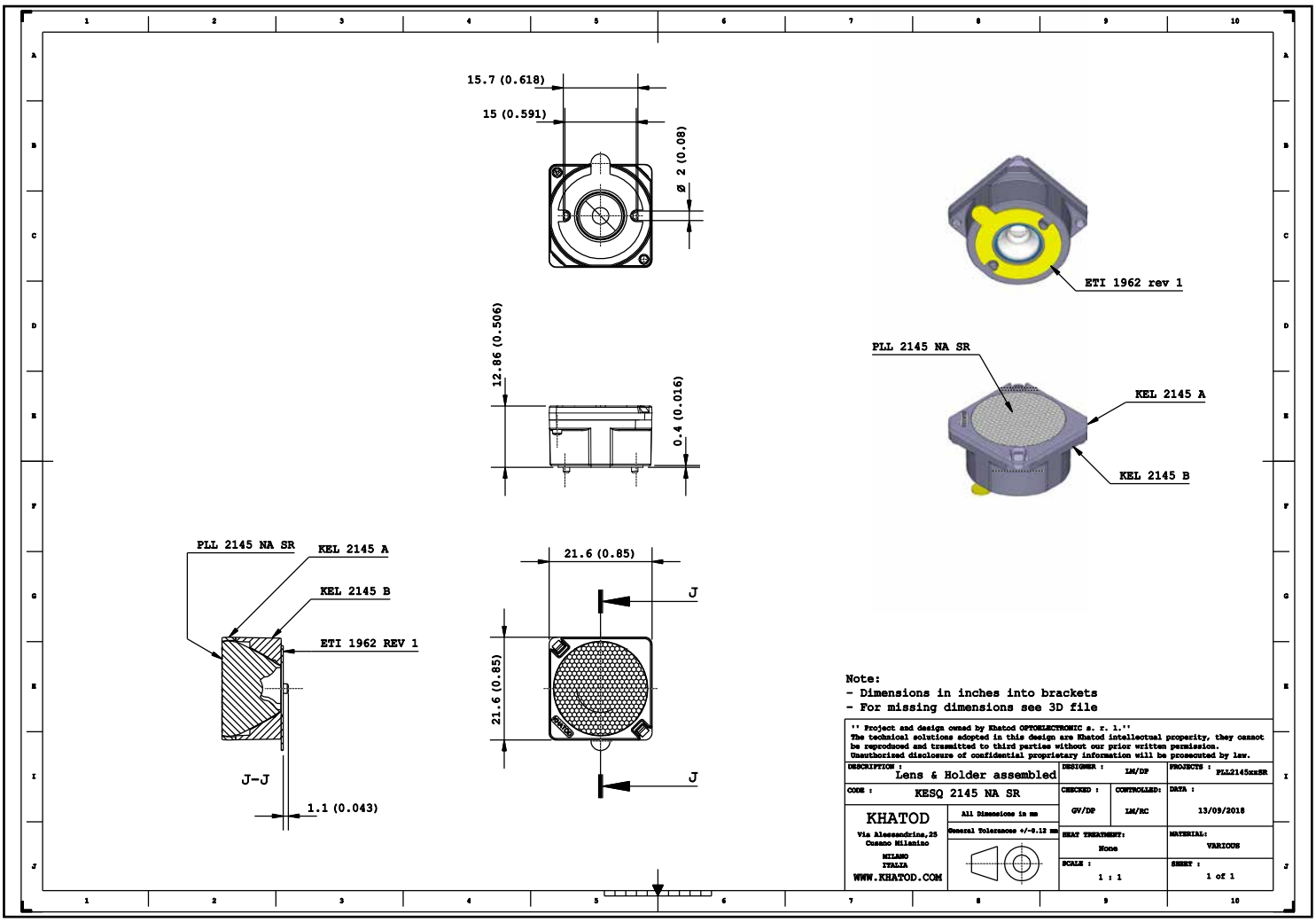

Fixing Adhesive Tape Technical Drawing

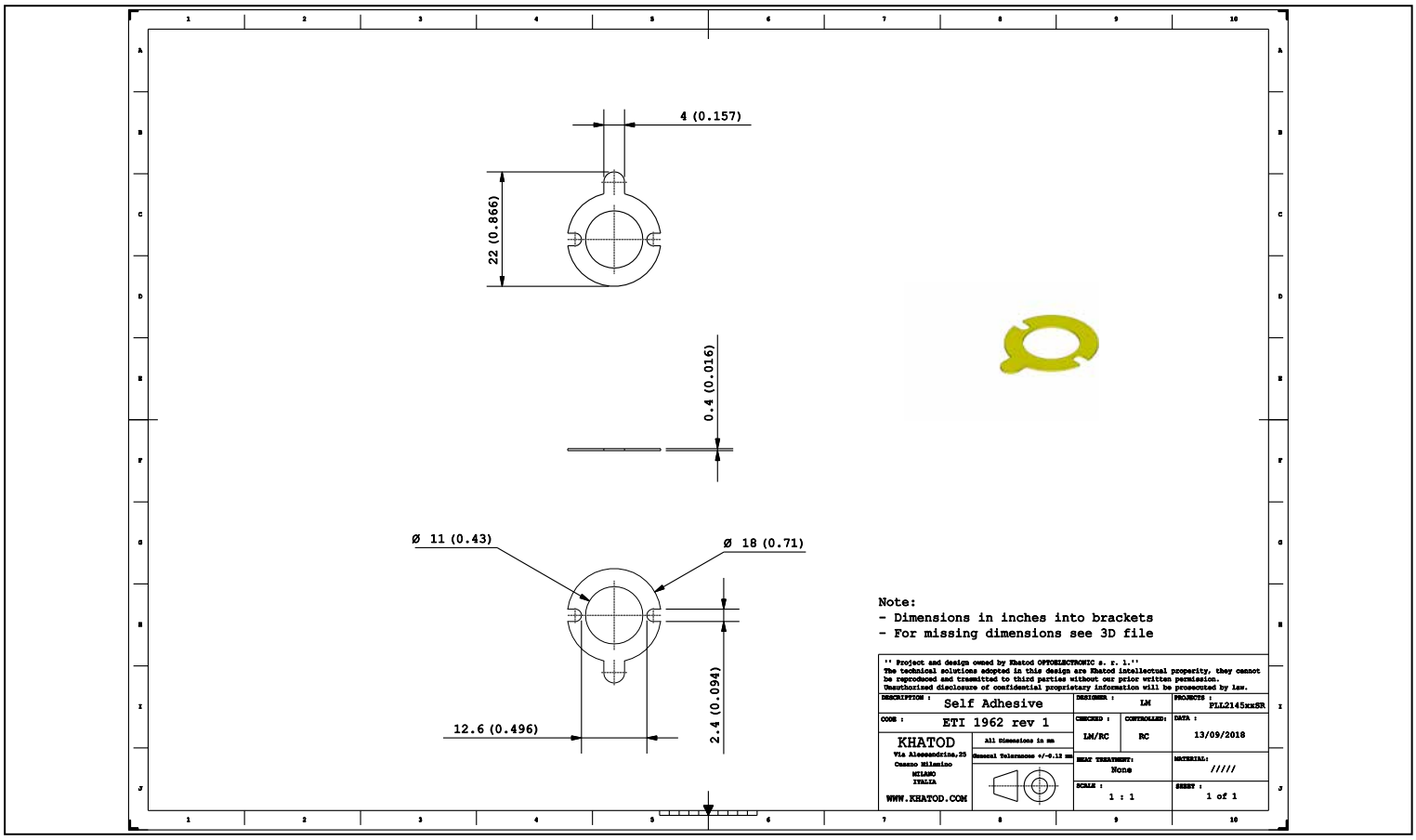

3M

High Strength Double Coated Tape with Adhesive 300LSE

9474LE • 9495LE

Technical Data **November, 2008**

Product Description

3M™ Double Coated Tapes with 3M™ Adhesive 300LSE provides high bond strength to most surfaces, including many low surface energy plastics such as polypropylene and powder coated paints. The acrylic adhesive also provides excellent adhesion to surfaces contaminated lightly with oil typically used with machine parts.

Construction

Product Number	Total Tape Thickness (w/o liner)	Faceside[1] Adhesive Type/ Thickness	Carrier Type/ Thickness	Backside[2] Adhesive Type/ Thickness	Liner Color, Type, Print	Liner Caliper[3]
3M™ Double Coated Tape 9474LE	0.0067" (0.17mm)	0.0028" (0.071mm)	Clear Polyester 0.0005" (0.013mm)	0.0034" (0.086mm)	Faceside Liner/ Tan, 58# Polycoated Kraft, no print Backside liner/ Tan, 58#, Polycoated Kraft, "3M 300LSE"	0.0042" (0.11mm)/ 0.0042" (0.11mm)
3M™ Double Coated Tape 9495LE	0.0067" (0.17mm)	0.0028" (0.071mm)	Clear Polyester 0.0005" (0.013mm)	0.0034" (0.086mm)	Tan, 58#, Polycoated Kraft, "3M 300LSE"	0.0042" (0.11mm)

Note 1: Faceside (FS) adhesive is on the interior of the roll, exposed when unwound.
Note 2: Backside (BS) adhesive is on the exterior of the roll, exposed when liner is removed.
Note 3: The caliper listed is based on a calculation from manufacturing controlled adhesive coat weights using a density of 1.012 g/cc.

3M™ High Strength Double Coated Tape with Adhesive 300LSE

9474LE • 9495LE

Typical Physical Properties and Performance Characteristics

Note: The following technical information and data should be considered representative or typical only and should not be used for specification purposes.

Product Number	3M™ Double Coated Tapes 9474LE, 9495LE
Adhesion to stainless steel ASTM D3330 - 180 degree 2 mil polyester as backing	Oz/in (N/100 mm) Faceside / Backside
- 72 hour RT	100 (113) / 105 (119)
Adhesion to stainless steel ASTM D3330 - 90 degree 2 mil al foil	Oz/in (N/100 mm) Faceside/Backside
- 15 minute RT	70 (79) / 80 (90)
- 72 hour RT	85 (96) / 100 (113)
- 72 hour 158°F (70°C)	106 (119) / 130 (147)
Adhesion to other surfaces ASTM D3330 - 90 degree, 2 mil al foil, 72 hour RT	Oz/in (N/100 mm) Faceside / Backside
ABS	100 (124) / 90 (102)
Polypropylene	90 (102) / 80 (90)
Polycarbonate	150 (169) / 140 (158)
Glass	90 (102) / 100 (113)
Shear Strength - ASTM D3654 Modified – (.5 inch² sample size)	
1000 grams at 72°F (22°C)	>10,000 minutes
500 grams at 158°F (70°C)	>10,000 minutes
Relative High Temperature Operating Ranges:	
Long Term (days, weeks)	200°F (93°C)
Short Term (minutes, hours)	300°F (149°C)
Relative Solvent Resistance:	Very Good

Materials

Material	Top
SILICONE for the LENS	-30°...150°C
PC for the HOLDER	-30°...110°C
The Adhesive Tape datasheet is available at 3M website.	

Notes:

- The optical values shown are the result of optical simulations carried out with LIGHTOOLS, ASAP and ZEMAX software systems. The optical simulations are carried out on the basis of the typical values provided in the LED manufacturers' official datasheets. The photometric analysis has been carried out on physical samples.
  On request, by supplying your PCB, we can provide the measurement photometric file.

Use and Maintenance

- DO NOT HANDLE OR INSTALL LENSES WITHOUT WEARING GLOVES, SKIN OILS MAY DAMAGE LENS OR LIGHT TRANSMISSION;
- CLEAN LENSES WITH MILD SOAP AND WATER AND A SOFT CLOTH;
- DO NOT USE ANY COMMERCIAL CLEANING SOLVENTS ON LENSES.

Disclaimer

Please note that flow lines and weld lines on the external surfaces of the lenses are acceptable if the optical performance of the lens is within the specifications.
Should you require further information, please contact Khatod for advice. All lens testing must be subject to identical conditions as Khatod test condition. Khatod Optoelectronic, Milan, Italy, manufactures lenses for LEDs. Any other use of the lens shall void our liability and warranty. The lenses are an inert component to be used in the manufacture of various products. Our warranty and liability are limited only to the manufacture of the lens. You may not modify, copy, distribute reproduce, license or alter the lens and related materials of Khatod. Khatod does not warrant against damages or defects arising out of the use or misuse of the products; against defects or damage arising from improper installation, or against defects in the product or in its components. No warranty of any kind, expressed or implied, is made regarding the safety of the products. The entire risk as to the quality or performance of the product is with the buyer. In no event shall Khatod be liable for any direct, indirect, punitive, incidental, special, consequential damages, or any damages whatsoever arising out of or connected with the use or misuse of the product. Khatod shall not have any obligation with respect to the product or any part thereof, whether based on contract, tort, strict liability or otherwise. Buyer assumes all risks and liability from use of the product. The laws of Milan, Italy govern this product warranty and liability and you hereby consent to the exclusive jurisdiction and venue of courts in Milan, Italy in all disputes arising out of or relating to the use of this product. Production, marketing, distribution, sale of these products as well as their possible modifications and variations are only exclusive right of Khatod Optoelectronic. No company can perform any of these actions without written permission released by Khatod Optoelectronic. The information contained in this document is proprietary of Khatod Optoelectronic and may change without notice.
REPRODUCTION PROHIBITED.